STATE OF NORTH CAROLINA
DEPT. OF TRANSPORTATION
DIVISION OF HIGHWAYS
RALEIGH, N.C.

1-08

ENGLISH STANDARD DRAWING FOR

# TYPE 'A' SIGNS

WELDED STUD CONSTRUCTION

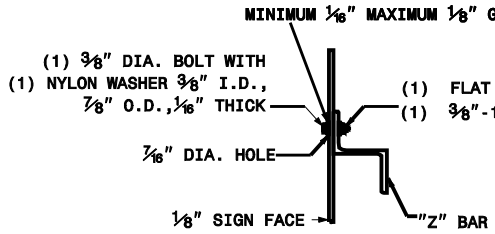


DETAIL A

THRU-BOLT CONNECTION

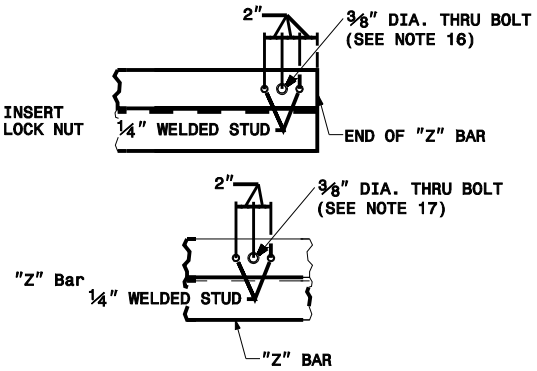


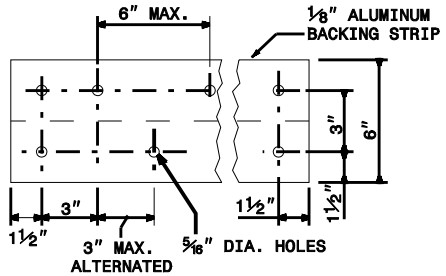


DETAIL B

TYPICAL HORIZ. JOINT HOLE PATTERN

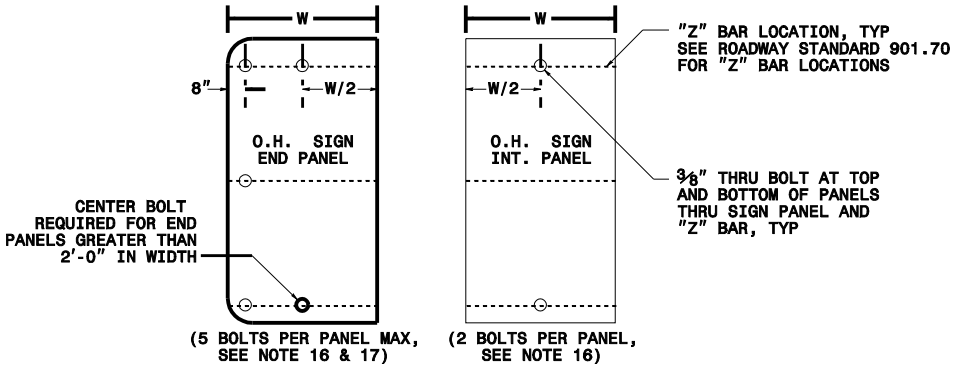


DETAIL C

THRU-BOLT LOCATIONS

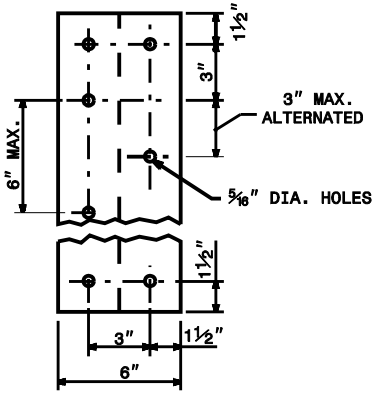


DETAIL D

BACKING STRIP HOLE PATTERN

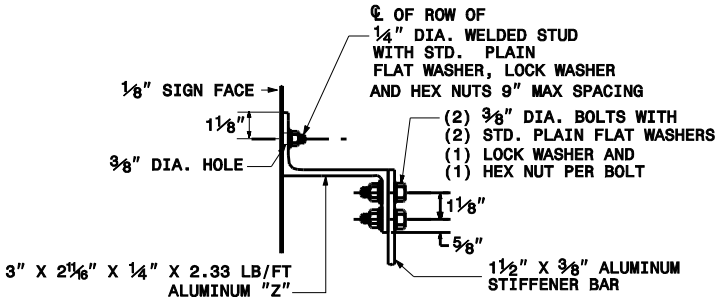


SECTION A-A

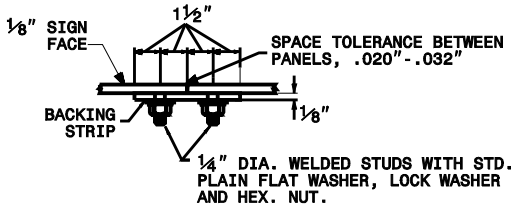


SECTION B-B

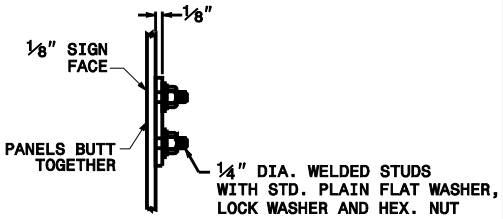


SECTION C-C

SHEET 2 OF 2

901.10

STATE OF NORTH CAROLINA
DEPT. OF TRANSPORTATION
DIVISION OF HIGHWAYS
RALEIGH, N.C.

1-08

ENGLISH STANDARD DRAWING FOR

TYPE 'A' SIGNS

WELDED STUD CONSTRUCTION

SHEET 2 OF 2

901.10