STATE OF
NORTH CAROLINA
DEPT. OF TRANSPORTATION
DIVISION OF HIGHWAYS
RALEIGH, N.C.

7-06

METRIC STANDARD DRAWING FOR

REINFORCED CONCRETE ENDWALL

FOR SINGLE 1350mm PIPE - 90° SKEW

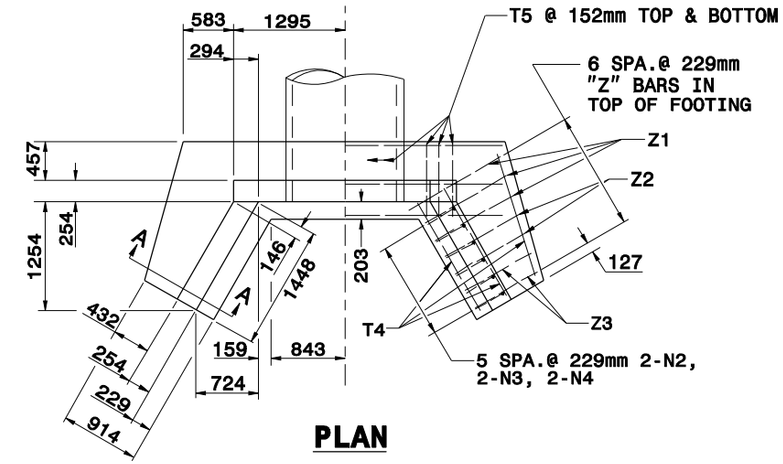

PLAN

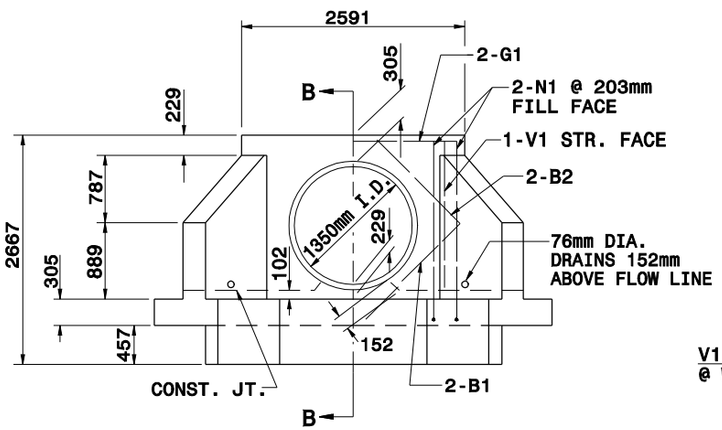

ELEVATION

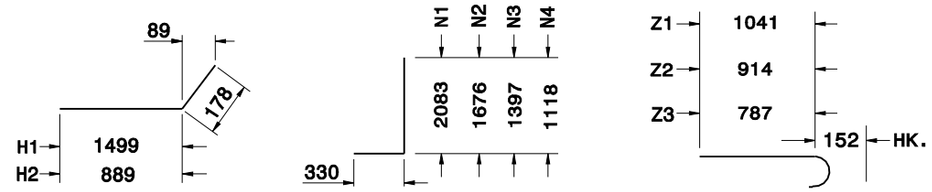

"H" BARS

"N" BARS

"Z" BARS

"H", "N", & "Z" BAR DIMENSIONS ARE OUT TO OUT.

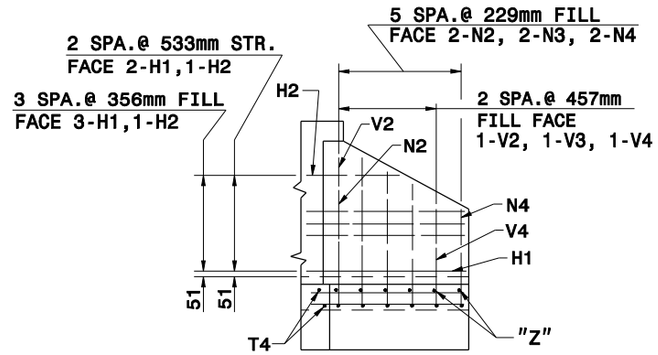

WING ELEVATION

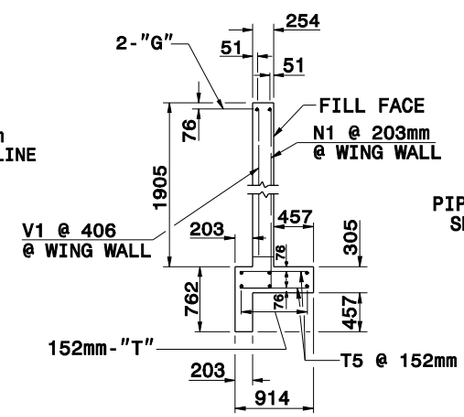

SECTION B-B

PIPE NOT SHOWN

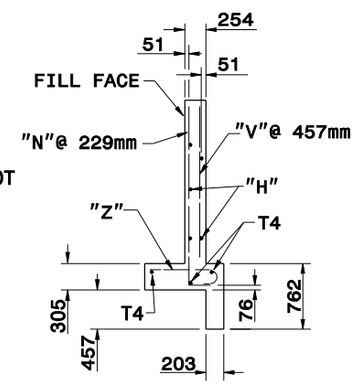

SECTION A-A

SEE STD. 838.45 FOR GENERAL NOTES.

BILL OF MATERIAL FOR ENDWALL

REINF. STEEL			1 PIPE	
BAR	SIZE	LENGTH	NO.	WEIGHT
B1	#13	1676	4	7
B2	#13	1372	4	6
G1	#22	2489	2	15
H1	#13	1676	10	17
H2	#13	1067	4	4
N1	#13	2413	4	10
N2	#13	2007	4	8
N3	#13	1727	4	7
N4	#13	1448	4	6
T1	#13	3607	6	22
T4	#13	1600	6	10
T5	#13	762	34	26
V1	#13	1753	2	4
V2	#13	1473	2	3
V3	#13	1194	2	2
V4	#13	940	2	2
Z1	#13	1194	6	7
Z2	#13	1067	4	4
Z3	#13	940	4	4
REINF. STEEL kg.				164
CON./R.C.		m^3		3.8

Note:
This drawing is dimensioned in millimeters unless otherwise depicted within the drawing.

SHEET 1 OF 2

838.21

STATE OF
NORTH CAROLINA
DEPT. OF TRANSPORTATION
DIVISION OF HIGHWAYS
RALEIGH, N.C.

7-06

METRIC STANDARD DRAWING FOR

REINFORCED CONCRETE ENDWALL

FOR SINGLE 1350mm PIPE - 90° SKEW

SHEET 1 OF 2

838.21