Approach Slab "As builts"

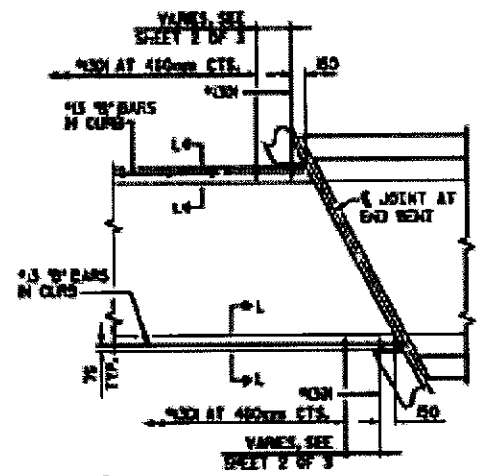

PLAN

FOR APPROACH SLAB DETAILS AND REINFORCING, SEE SHEET 2 OF 3

NOTES

FOR REINFORCED BRIDGE APPROACH FILL, INCLUDING FABRIC, IMPERMEABLE GEOMEMBRANE, 102mm Ø DRAINAGE PIPE, 19mm STONE, AND SELECT GRANULAR FILL, SEE ROADWAY PLANS.

TEMPORARY DRAINAGE AND TEMPORARY BERM AND SLOPE DRAINS WILL BE PAID FOR UNDER THE LUMP SUM PRICE FOR BRIDGE APPROACH SLAB.

AREA BETWEEN THE WINGWALL AND APPROACH SLAB SHALL BE GRADED TO DRAIN THE WATER AWAY FROM THE FILL FACE OF THE BRIDGE.

THE 150mm COMP. A.B.C. SHALL EXTEND 3m BEYOND THE END OF THE APPROACH SLAB AND 300mm OUTSIDE OF EACH EDGE OF THE SLAB.

THE CONTRACTOR MAY, AT HIS OPTION, USE 100mm TYPE HB ASPHALT CONCRETE BASE COURSE IN LIEU OF 150mm COMP. A.B.C. IF THIS OPTION IS USED, THE CONCRETE BASE SHALL EXTEND 3m BEYOND THE END OF THE APPROACH SLAB AND 300mm OUTSIDE BOTH EDGES OF THE SLAB.

THE CONTRACTOR MAY, AT HIS OPTION, USE 150mm CLASS "A" CONCRETE BASE IN LIEU OF 150mm COMP. A.B.C. IF THIS OPTION IS USED, THE CONCRETE BASE SHALL EXTEND 3m BEYOND THE END OF THE APPROACH SLAB AND THE WIDTH SHALL BE THE SAME AS THAT OF THE APPROACH SLAB. THE CONCRETE SHALL BE FINISHED TO A SMOOTH SURFACE AND A LAYER OF 13.6 kg ROOFING FELT SHALL BE PLACED BETWEEN THE CONCRETE BASE AND THE APPROACH SLAB TO PREVENT BOND. THE APPROACH SLAB SHALL NOT BE CAST UNTIL THE CONCRETE BASE HAS REACHED AN AGE OF THREE CURING DAYS.

DOWELS MAY BE PUSHED INTO GREEN CONCRETE AFTER THE SLAB HAS BEEN SCREEDED AND FLOAT FINISHED, EXCEPT AS NOTED ON THE PLANS.

~~THE BERM SHALL BE CAPPED PRIOR TO THE CASTING OF THE CONCRETE CURB AND THE BARRIER RAIL.~~

~~FOR SKEWS BETWEEN 70° AND 105°, THE CONTRACTOR MAY, AT HIS OPTION, USE A COMPRESSION JOINT SEAL IN LIEU OF THE EVAZOTE JOINT SEAL. NO SPECIAL PROVISION FOR OPTIONAL PREFORMED COMPRESSION JOINT SEALS.~~

WITH EVAZOTE JOINT SEAL

FOR EVAZOTE JOINT SEALS, SEE SPECIAL PROVISIONS.

PAYMENT FOR EVAZOTE JOINT SEALS SHALL BE INCLUDED IN THE LUMP SUM PRICE FOR EVAZOTE JOINT SEALS.

THE NOMINAL UNCOMPRESSED SEAL WIDTH OF THE EVAZOTE JOINT SEAL SHALL BE 75mm AT END BENT 1 AND 75mm AT END BENT 2.

~~WITH OPTIONAL COMPRESSION JOINT SEAL~~

~~PAYMENT FOR OPTIONAL COMPRESSION JOINT SEALS SHALL BE INCLUDED IN THE LUMP SUM PRICE FOR EVAZOTE JOINT SEALS.~~

~~THE NOMINAL UNCOMPRESSED SEAL WIDTH OF THE COMPRESSION JOINT SEAL SHALL BE 75mm.~~

BILL OF MATERIAL

APPROACH SLAB AT END BENT 1

BAR	NO.	SIZE	TYPE	LENGTH (mm)	WEIGHT (kg)
J1	52	#5	STR.	2,765	355
J2*	36	#5	STR.	1,870	175
B1	148	#8	STR.	5,010	1,639
B3*	1	#5	STR.	2,920	5
B4*	1	#5	STR.	3,020	5
B5*	148	#8	STR.	4,900	1,619
B6*	24	#3	STR.	250	6
C1*	3	#8	STR.	460	3
REINFORCING STEEL					1,941 kgs.
EPOXY COATED REINF. STEEL					1,634 kgs.
CLASS AA CONCRETE					24.7 CU.M.

APPROACH SLAB AT END BENT 2

BAR	NO.	SIZE	TYPE	LENGTH (mm)	WEIGHT (kg)
A3	30	#3	STR.	2,685	241
A4*	30	#3	STR.	2,820	254
B1	148	#8	STR.	5,010	1,639
B2*	148	#8	STR.	4,920	1,609
B3*	2	#3	STR.	4,270	10
B6*	24	#3	STR.	260	6
REINFORCING STEEL					1,940 kgs.
EPOXY COATED REINF. STEEL					1,663 kgs.
CLASS AA CONCRETE					24.8 CU.M.

* DENOTES EPOXY COATED REINF. STEEL.

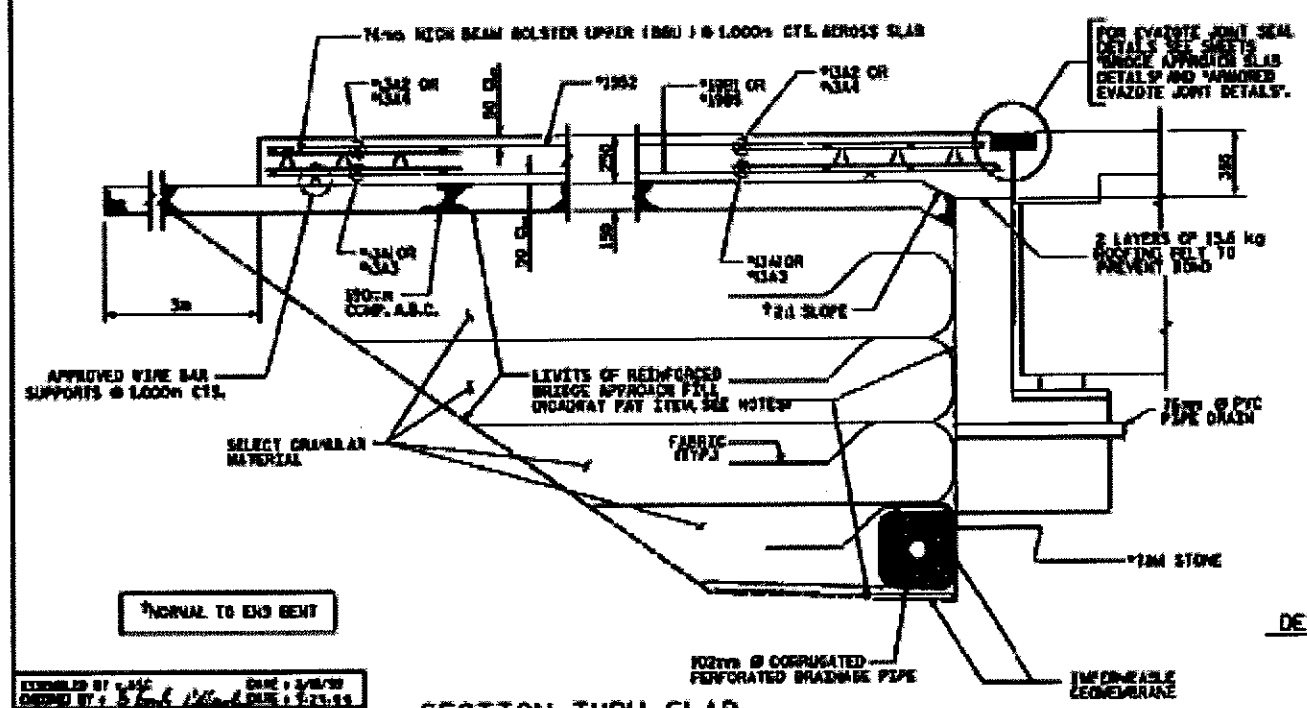

SECTION THRU SLAB

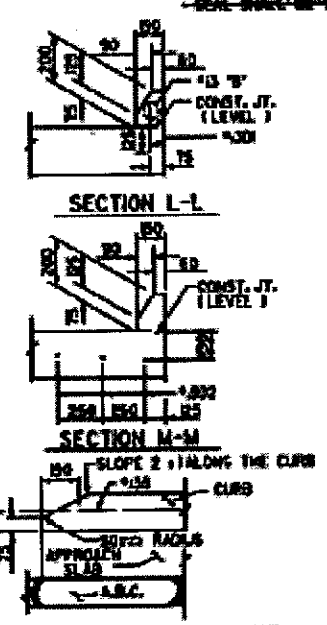

DETAIL AT END OF CURB WITHOUT SPECIAL DRAINAGE

CURB DETAILS

PROJECT NO. I-2402B

GUILFORD COUNTY

STATION: 90+95.064 -L- POT

SHEET 1 OF 3

PREPARED BY KALLANALLA L. WILSON, P.A.

DEPARTMENT OF TRANSPORTATION

STANDARD BRIDGE APPROACH SLAB FOR RIGID PAVEMENT WITH REINFORCED BRIDGE APPROACH FILL

RIGHT LANE

STD. NO. BAS6SM

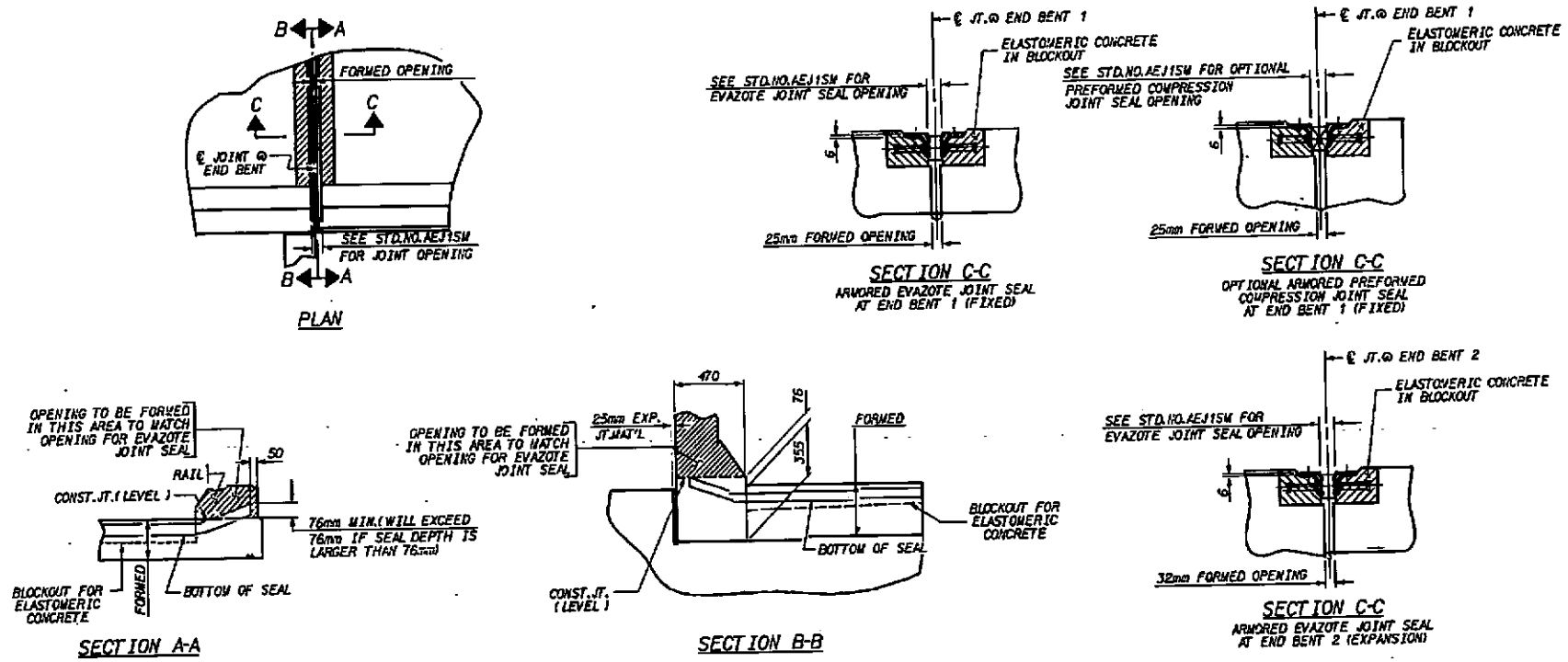

JOINT SEAL DETAILS AT END BENT

(FOR BARRIER RAIL)

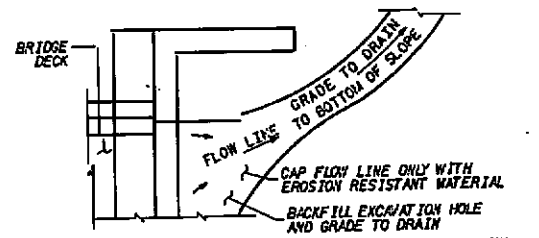

NOTE: IF THE APPROACH SLAB IS NOT CONSTRUCTED IMMEDIATELY AFTER THE BACKFILLING OF THE END BENT EXCAVATION, GRADE TO DRAIN TO THE BOTTOM OF THE SLOPE AND PROVIDE EROSION RESISTANT MATERIAL SUCH AS FIBERGLASS ROVING OR AS DIRECTED BY THE ENGINEER TO PREVENT SOIL EROSION AND TO PROTECT THE AREA ADJACENT TO THE STRUCTURE. THE CONTRACTOR WILL BE REQUIRED TO REMOVE THESE MATERIALS PRIOR TO CONSTRUCTION OF THE APPROACH SLAB.

TEMPORARY DRAINAGE DETAIL

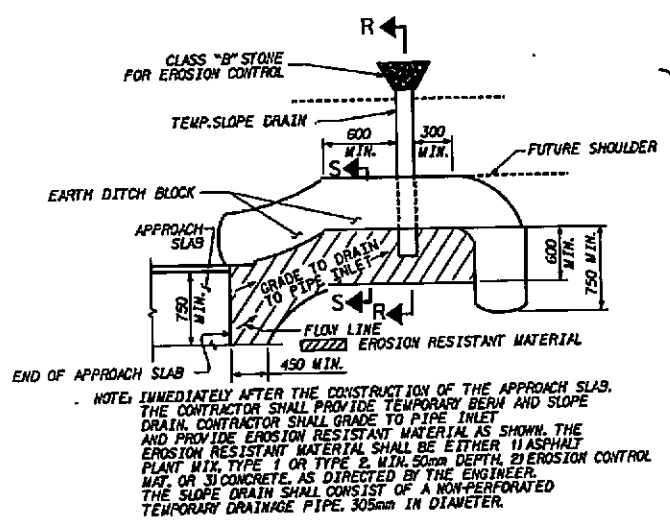

NOTE: IMMEDIATELY AFTER THE CONSTRUCTION OF THE APPROACH SLAB, THE CONTRACTOR SHALL PROVIDE TEMPORARY BERM AND SLOPE DRAIN. CONTRACTOR SHALL GRADE TO PIPE INLET AND PROVIDE EROSION RESISTANT MATERIAL AS SHOWN. THE EROSION RESISTANT MATERIAL SHALL BE EITHER 1) ASPHALT PLANT MIX TYPE 1 OR TYPE 2, MIN. 50mm DEPTH, 2) EROSION CONTROL MAT, OR 3) CONCRETE, AS DIRECTED BY THE ENGINEER. THE SLOPE DRAIN SHALL CONSIST OF A NON-PERFORATED TEMPORARY DRAINAGE PIPE, 305mm IN DIAMETER.

PLAN VIEW

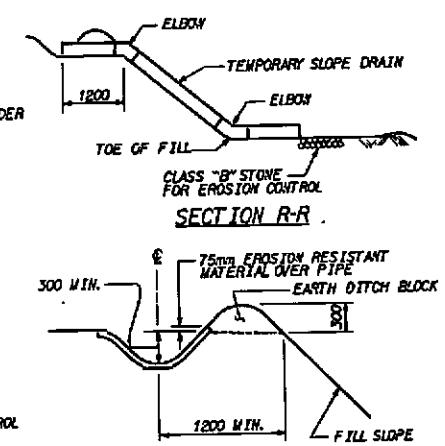

TEMPORARY BERM AND SLOPE DRAIN DETAILS

MA Engineering CONSULTANTS, INC.
598 East Chatham Street Suite 137 Cary, NC 27511
Phone: 919.297.0220 Fax: 919.297.0221

PROJECT NO. U-2524BA
GUILFORD COUNTY
STATION: 25+57.061-L SB-
SHEET 3 OF 3

STATE OF NORTH CAROLINA
DEPARTMENT OF TRANSPORTATION
BREACH

STANDARD
BRIDGE APPROACH SLAB DETAILS

FEBRUARY 2002

REVISIONS						
NO.	BY:	DATE:	NO.	BY:	DATE:	
1			3			
2			4			

SHEET NO. S-187
TOTAL SHEETS 417

DRAWING NO. 23
STD. NO. BASIO5M

ASSEMBLED BY : D.M. HAMBRIGHT	DATE : 2/2001	
CHECKED BY : T.K. ALTER	DATE : 5/2001	
DRAWN BY : FCJ 11/96	REV. 7/1/98	RWK/LES
CHECKED BY : AMB 11/96	REV. 10/6/98	RWK/LES
	REV. 10/17/2001	RWK/LES